Mechanical Cam Switches

BNS 813-B05-R10-46-41-01
Order Code: BNS0407

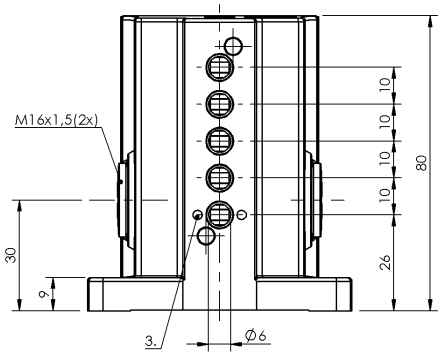

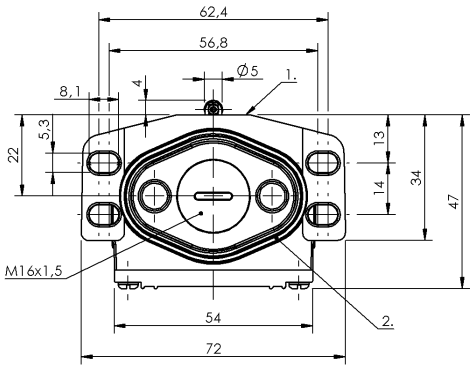

1) Reference edge, 2) Sealing ring, 3) Mark. Safety switch position

A 064828

Basic features

Approval/Conformity	CE CCC WEEE
Basic standard	IEC 60947-5-1
Operating principle	1-5. Switch position: Mechanical
Version	with forced opening

Display/Operation

Function indicator	1-5. Switch position: None

Electrical connection

Connection type	1-5. Switch position: Screw terminal

Electrical data

Continuous current	1-5. Switch position: 5 A
Rated operating voltage Ue	1-5. Switch position: 250 V AC
Switching function mechanical	Single-pin changeover
Switching rate	1-5. Switch position: 200/min

Environmental conditions

Ambient temperature	-5...85 °C
IP rating	IP67

Functional safety

B10d (EN ISO 13849-1)	BSE 64: 10 mil. switching cycles BSE 70.1: 10 mil. switching cycles

Material

Housing material	Aluminium, Anodized
Housing material, surface protection	Anodized
Material contacts	1-5. Switch position: Silver
Plunger material	1-5. Switch position: 1.4034 stainless steel

Mechanical data

Approach direction	longitudinal, parallel to attachment surface
Approach speed	1-5. Switch position: 60 m/min
Dimension	72 x 80 x 47 mm
Distance cam - reference edge	1. Switch position: 2.50...2.80 mm 2-5. Switch position: 2.30...2.80 mm
Flange, feed-through	1 threaded exit M16
Installation	Vertical
Life expectancy mechanical	1-5. Switch position: 10 mil. switching operations
Number of switching positions	5x Roller Mechanical
Plunger spacing 1st switch position	26 mm
Plunger style	1-5. switch position: Roller 1-5. switch position: Roller
Switch actuation force	1-5. Switch position: 8 N
Switching element	1. Switch position: BSE 64 2-5. Switch position: BSE 70.1

Range/Distance

Repeatability	1-5. Switch position: ±0.05 mm
Switch position spacing	10 mm
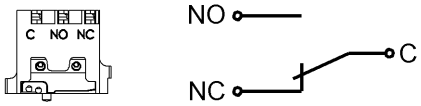
Wiring Diagrams (Schematic)