Mechanical Cam Switches

BNS 813-B06-R08-40-30-02
Order Code: BNS053T

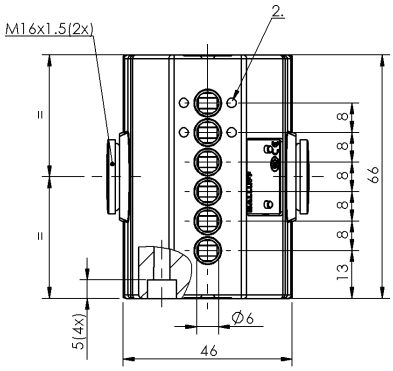

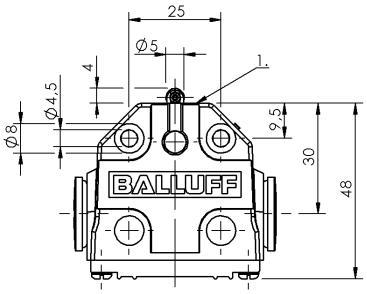

1) Reference edge, 2) Mark. Safety switch position

A 039147

Basic features

Approval/Conformity	CE CCC WEEE
Basic standard	IEC 60947-5-1
Operating principle	1-6. Switch position: Mechanical
Version	with forced opening

Display/Operation

Function indicator	1-6. Switch position: None

Electrical connection

Connection type	1-6. Switch position: Solder connection

Electrical data

Continuous current	1-6. Switch position: 5 A
Rated operating voltage Ue	1-6. Switch position: 250 V AC
Switching function mechanical	Single-pin changeover
Switching rate	1-6. Switch position: 200/min

Environmental conditions

Ambient temperature	-5...85 °C
IP rating	IP67

Functional safety

B10d (EN ISO 13849-1)	BSE 63: 10 mil. switching cycles BSE 69.1: 10 mil. switching cycles

Material

Housing material	Aluminium, Anodized
Housing material, surface protection	Anodized
Material contacts	1-6. Switch position: Silver
Plunger material	1-6. Switch position: 1.4034 stainless steel

Mechanical data

Approach direction	longitudinal, parallel to attachment surface
Approach speed	1-6. Switch position: 60 m/min
Distance cam - reference edge	1-6. Switch position: 2.50...2.80 mm
Flange, feed-through	None
Installation	Vertical
Life expectancy mechanical	1-6. Switch position: 10 mil. switching operations
Number of switching positions	6x Roller Mechanical
Plunger style	1-6th switch position: Roller 1-6th switch position: Roller
Switch actuation force	1-6. Switch position: 8 N
Switching element	1-2. Switch position: BSE 63 3-6. Switch position: BSE 69.1

Range/Distance

Repeatability	1-6. Switch position: ±0.05 mm
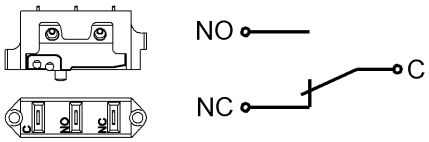
Wiring Diagrams (Schematic)